MOTOROLA SOLUTIONS

PELCO

1

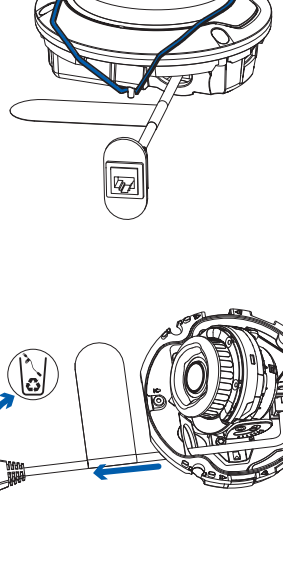

2

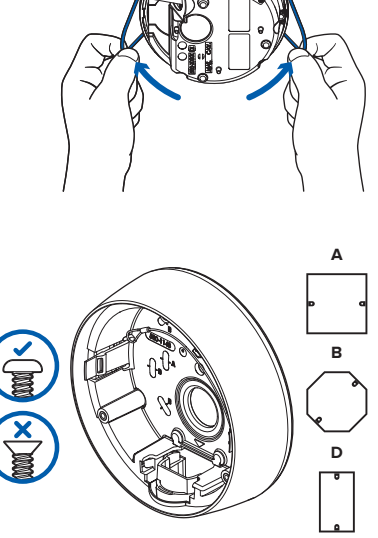

3

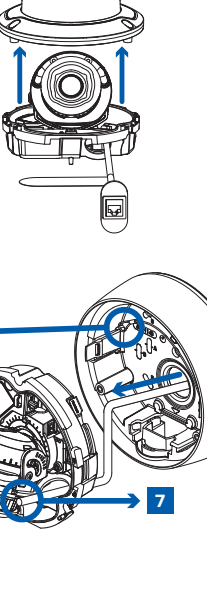

4

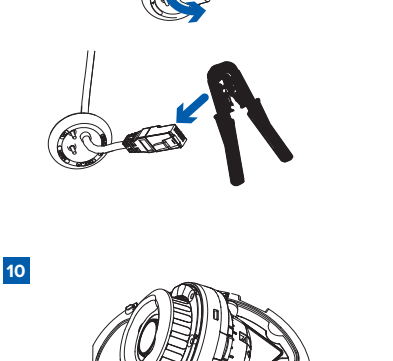

5

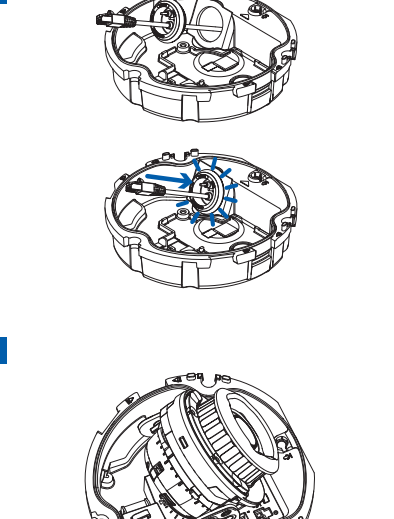

6

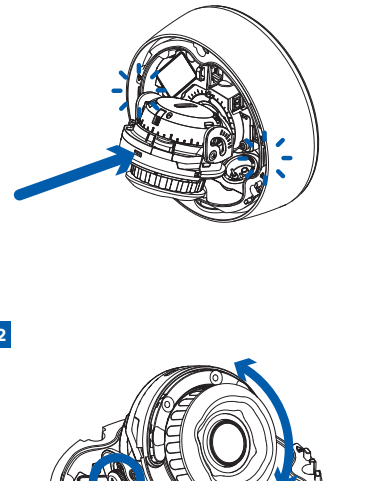

7

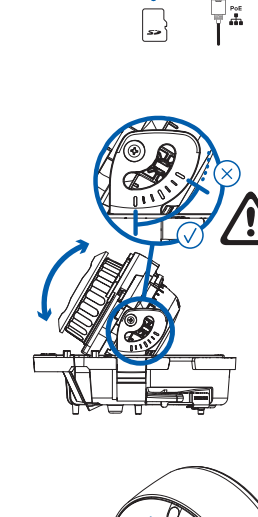

8

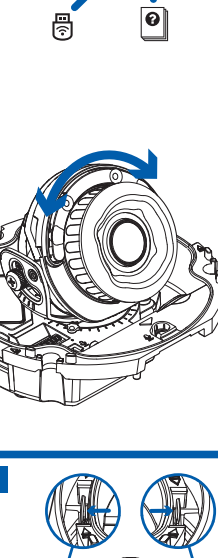

9

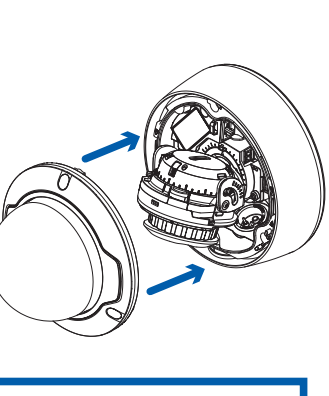

10

11

12

13

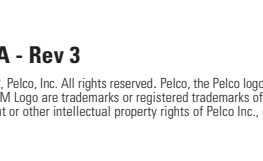

14

15

16

I

II

920-0437A - Rev 3

©Copyright 2022, Pelco, Inc. All rights reserved. Pelco, the Pelco logo, and other trademarks associated with Pelco products referred to in this publication are trademarks of Pelco, Inc. or its affiliates. MOTOROLA, MOTO, MOTOROLA SOLUTIONS, and the Stylized M Logo are trademarks or registered trademarks of Motorola Trademark Holdings, LLC and are used under license. Unless stated explicitly and in writing, no license is granted with respect to any copyright, industrial design, trademark, patent or other intellectual property rights of Pelco Inc., or its licensors.

MOTOROLA SOLUTIONS

PELCO

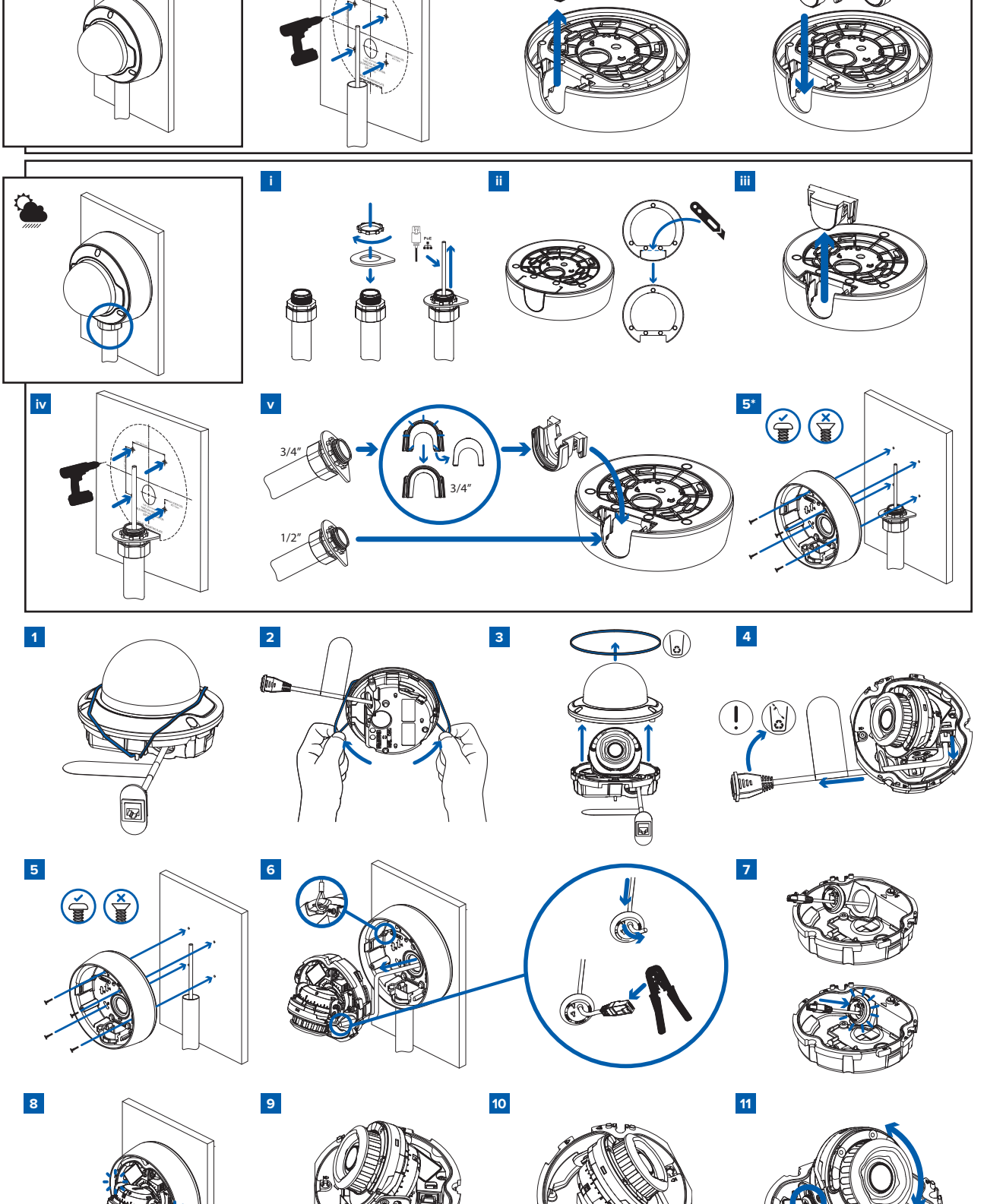

920-0437A - Rev 3

©Copyright 2022, Pelco, Inc. All rights reserved. Pelco, the Pelco logo, and other trademarks associated with Pelco products referred to in this publication are trademarks of Pelco, Inc. or its affiliates. MOTOROLA, MOTO, MOTOROLA SOLUTIONS, and the Stylized M Logo are trademarks or registered trademarks of Motorola Trademark Holdings, LLC and are used under license. Unless stated explicitly and in writing, no license is granted with respect to any copyright, industrial design, trademark, patent or other intellectual property rights of Pelco Inc., or its licensors.